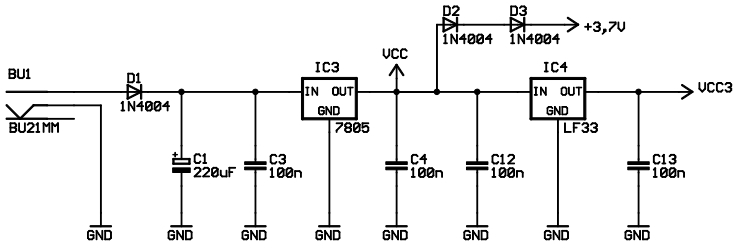
BU1
BU21MM
D1
1N4004
C1
220uF
C3
100n
IC3
IN OUT
GND
7805
VCC
D2
1N4004
D3
1N4004
+3,7V
C4
100n
C12
100n
IC4
IN OUT
GND
LF33
VCC3
C13
100n
GND

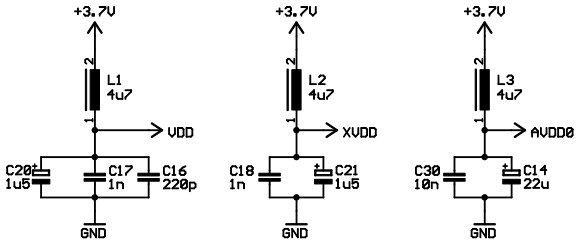
+3.7V
L1
4u7
VDD
C20
1u5
C17
1n
C16
220p
+3.7V
L2
4u7
XVDD
C18
1n
C21
1u5
+3.7V
L3
4u7
AVDD0
C30
10n
C14
22u
GND

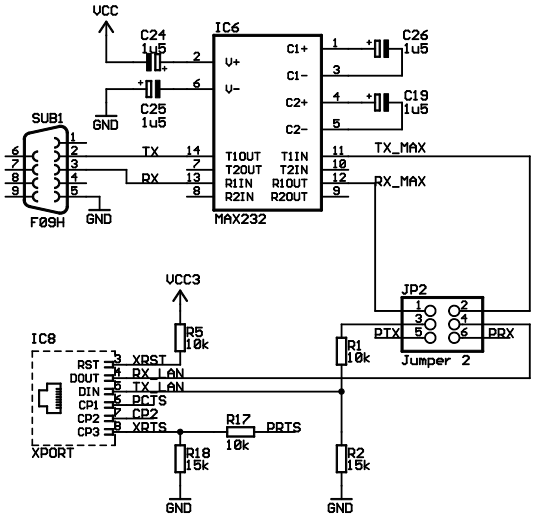
VCC
C24
1u5
C25
1u5
IC6
V+
V-
C1+
C1-
C2+
C2-
T1OUT
T2OUT
R1IN
R2IN
T1IN
T2IN
R1OUT
R2OUT
MAX232
C26
1u5
C19
1u5
TX_MAX
RX_MAX
SUB1
F09H
TX
RX
GND
VCC3
R5
10k
IC8
RST
DOUT
DIN
CP1
CP2
CP3
XRST
RX_LAN
TX_LAN
PCTS
CP2
XRTS
XPORT
R17
10k
PRTS
R18
15k
R1
10k
R2
15k
JP2
PTX
PRX
Jumper 2

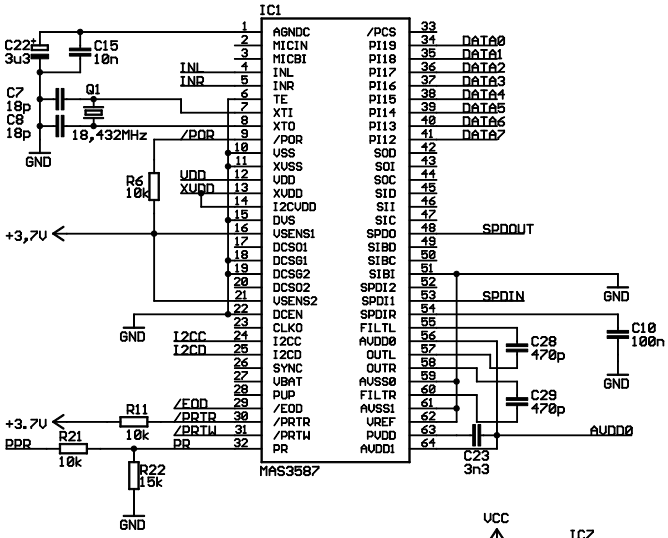
IC1
C22
3u3
C15
10n
C7
18p
C8
18p
Q1
18,432MHz
R6
10k
+3,7V
AGNDC
MICIN
MICBI
INL
INR
TE
XTI
XTO
/POR
VSS
XVSS
VDD
XVDD
I2CVDD
DVS
VSENS1
DCSO1
DCSG1
DCSG2
DCSO2
VSENS2
DCEN
CLKO
I2CC
I2CD
SYNC
VBAT
PUP
/EOD
/PRTR
/PRTW
PR
/PCS
PI19
PI18
PI17
PI16
PI15
PI14
PI13
PI12
SOD
SOI
SOC
SID
SII
SIC
SPDO
SIBD
SIBC
SIBI
SPDI2
SPDI1
SPDIR
FILTL
AVDD0
OUTL
OUTR
AVSS0
FILTR
AVSS1
VREF
PVDD
AVDD1
DATA0
DATA1
DATA2
DATA3
DATA4
DATA5
DATA6
DATA7
SPDOUT
SPDIN
C10
100n
C28
470p
C29
470p
C23
3n3
AVDD0
R11
10k
R21
10k
R22
15k
MAS3587
GND

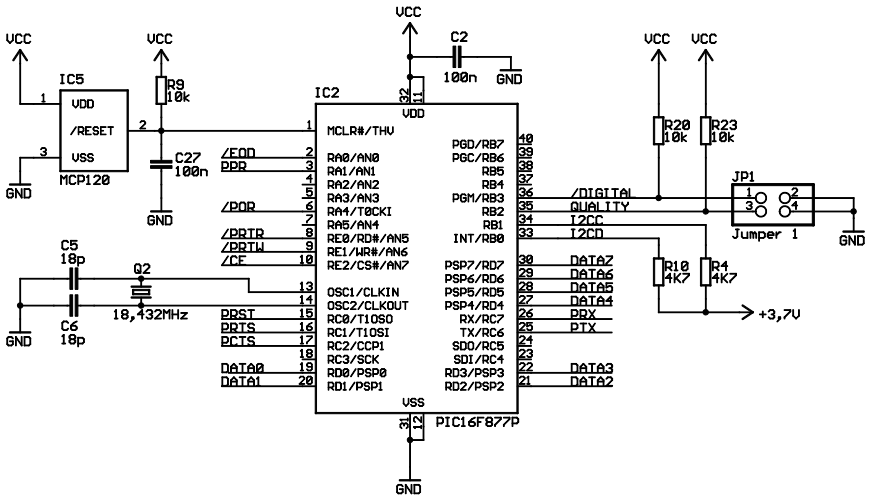
VCC
IC5
VDD
/RESET
VSS
MCP120
R9
10k
C27
100n
C2
100n
IC2
MCLR#/THV
RA0/AN0
RA1/AN1
RA2/AN2
RA3/AN3
RA4/T0CKI
RA5/AN4
RE0/RD#/AN5
RE1/WR#/AN6
RE2/CS#/AN7
OSC1/CLKIN
OSC2/CLKOUT
RC0/T1OSO
RC1/T1OSI
RC2/CCP1
RC3/SCK
RD0/PSP0
RD1/PSP1
PGD/RB7
PGC/RB6
RB5
RB4
PGM/RB3
RB2
RB1
INT/RB0
PSP7/RD7
PSP6/RD6
PSP5/RD5
PSP4/RD4
RX/RC7
TX/RC6
SDO/RC5
SDI/RC4
RD3/PSP3
RD2/PSP2
/EOD
PPR
/POR
/PRTR
/PRTW
/CF
PRST
PRTS
PCTS
DATA0
DATA1
DATA7
DATA6
DATA5
DATA4
PRX
PTX
DATA3
DATA2
/DIGITAL
QUALITY
I2CC
I2CD
PIC16F877P
C5
18p
C6
18p
Q2
18,432MHz
R20
10k
R23
10k
R10
4K7
R4
4K7
JP1
Jumper 1
+3,7V
GND

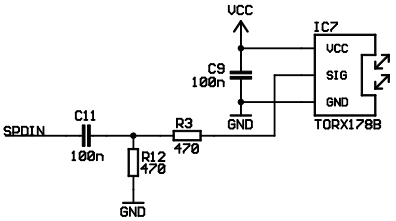
VCC
C9
100n
IC7
VCC
SIG
GND
TORX178B
SPDIN
C11
100n
R3
470
R12
470
GND

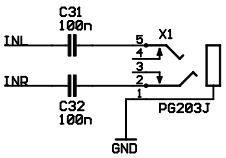
C31
100n
INL
INR
X1
C32
100n
PG203J
GND

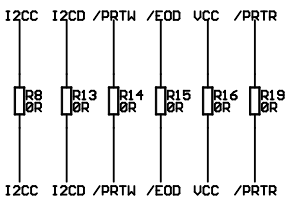
I2CC
I2CD
/PRTW
/EOD
VCC
/PRTR
R8
0R
R13
0R
R14
0R
R15
0R
R16
0R
R19
0R